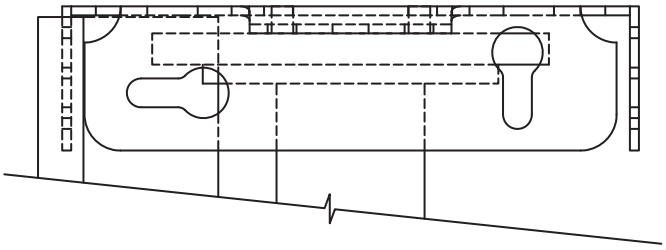

TOP VIEW

3D VIEW

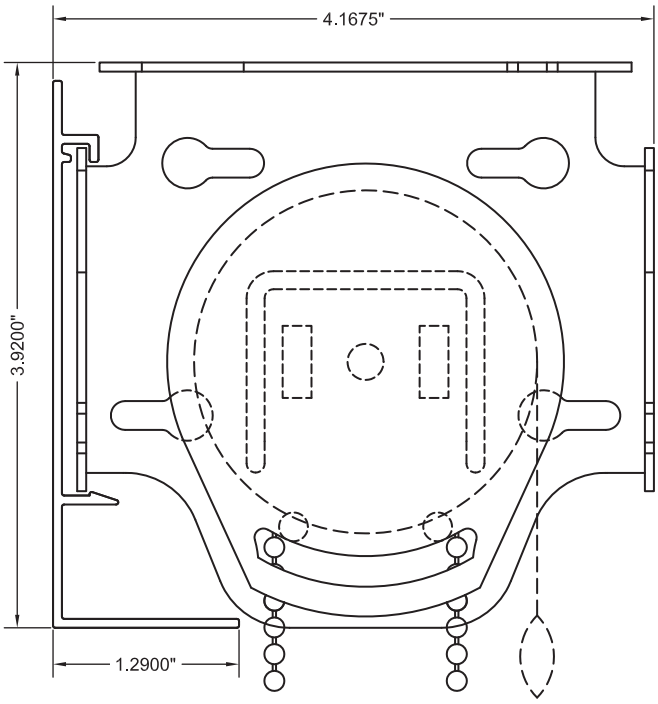

SIDE VIEW

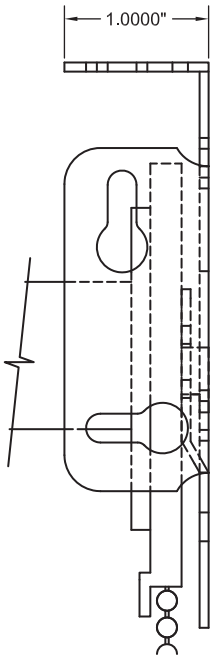

FRONT VIEW

ROLL-A-SHADE®
MANUFACTURING SUN CONTROL SOLUTIONS
112 College St., Suite 411
Toronto, ON M5G 1L6
TF: 1(888) 245-5077
P: 1-416-639-1365 F: 1-416-639-1366
WWW.ROLLASHADE.CA

SYSTEM DESCRIPTION:

MANUAL SL20 CLUTCH WITH 4" SQUARE FASCIA

DRAWN BY: MATT ALAJOKI

EMAIL: matt.alajoki@rollashade.com

DATE: 07/11/2016

SHEET 1 OF 1

RAS-B

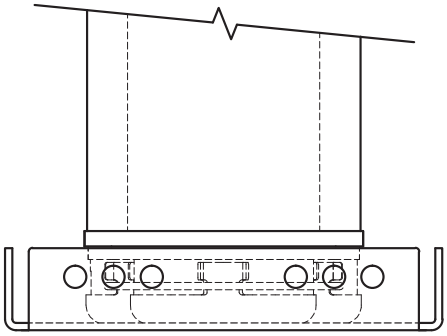

TOP VIEW

3D VIEW

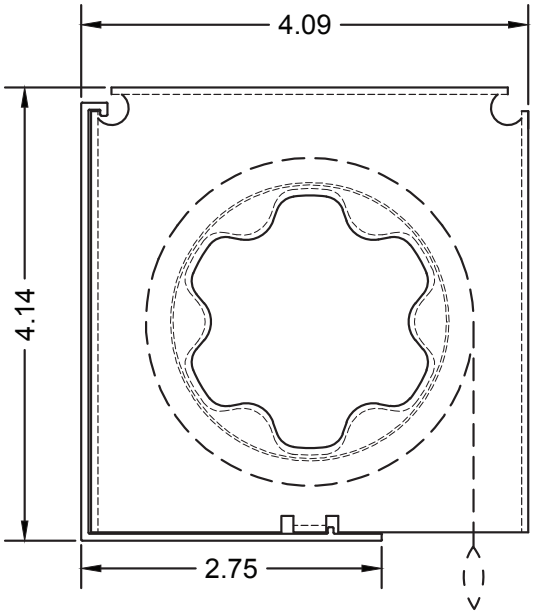

SIDE VIEW

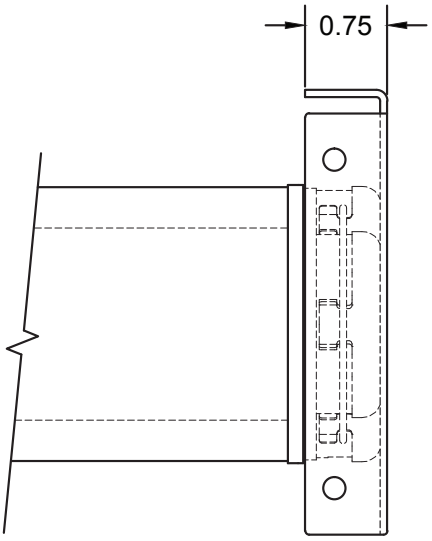

FRONT VIEW

ROLL-A-SHADE®
MANUFACTURING SUN CONTROL SOLUTIONS
112 College St., Suite 411
Toronto, ON M5G 1L6
TF: 1(888) 245-5077
P: 1-416-639-1365 F: 1-416-639-1366
WWW.ROLLASHADE.CA

SYSTEM DESCRIPTION:

4" BOTTOM FASCIA WITH 40MM MOTOR

DRAWN BY: MATT ALAJOKI
EMAIL: matt.alajoki@rollashade.com
DATE: 08/09/2017
SHEET 1 OF 1
RAS-B

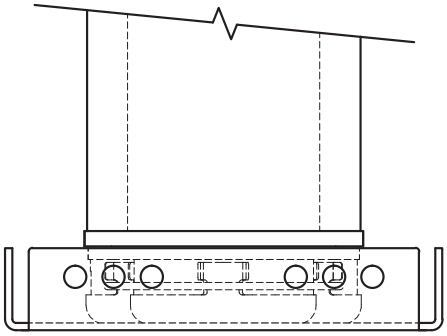

TOP VIEW

3D VIEW

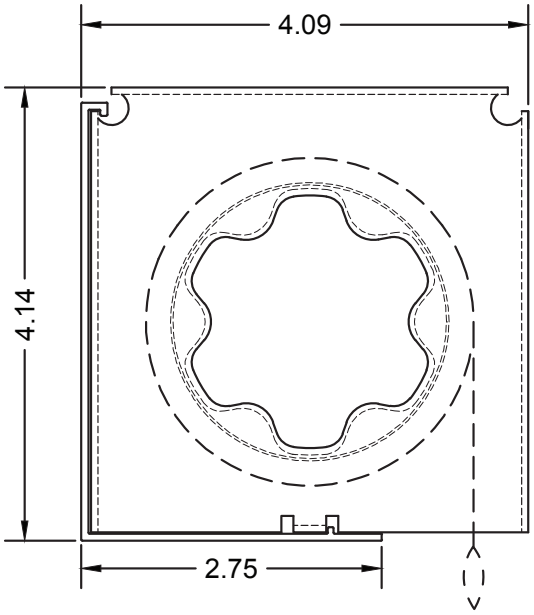

SIDE VIEW

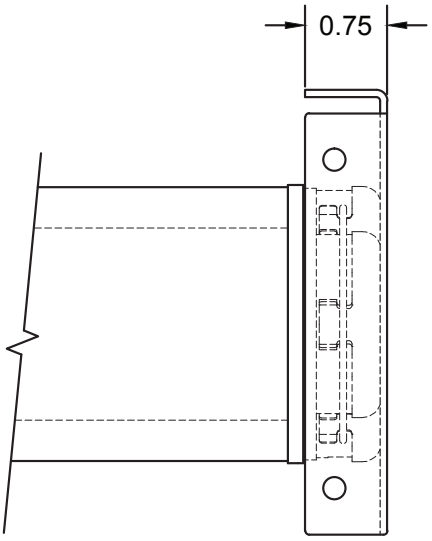

FRONT VIEW

ROLL-A-SHADE®
MANUFACTURING SUN CONTROL SOLUTIONS
112 College St., Suite 411
Toronto, ON M5G 1L6
TF: 1(888) 245-5077
P: 1-416-639-1365 F: 1-416-639-1366
WWW.ROLLASHADE.CA

SYSTEM DESCRIPTION:

4" BOTTOM FASCIA WITH 50MM MOTOR

DRAWN BY: MATT ALAJOKI
EMAIL: matt.alajoki@rollashade.com
DATE: 08/09/2017
SHEET 1 OF 1
RAS-B

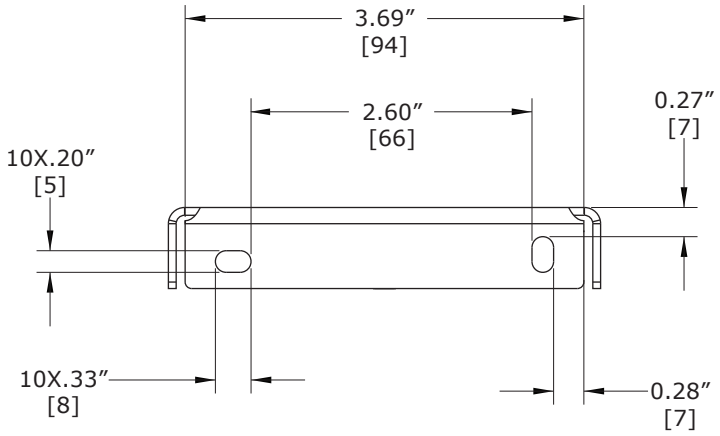

TOP VIEW

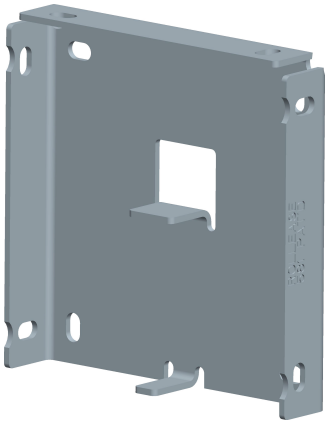

3D VIEW

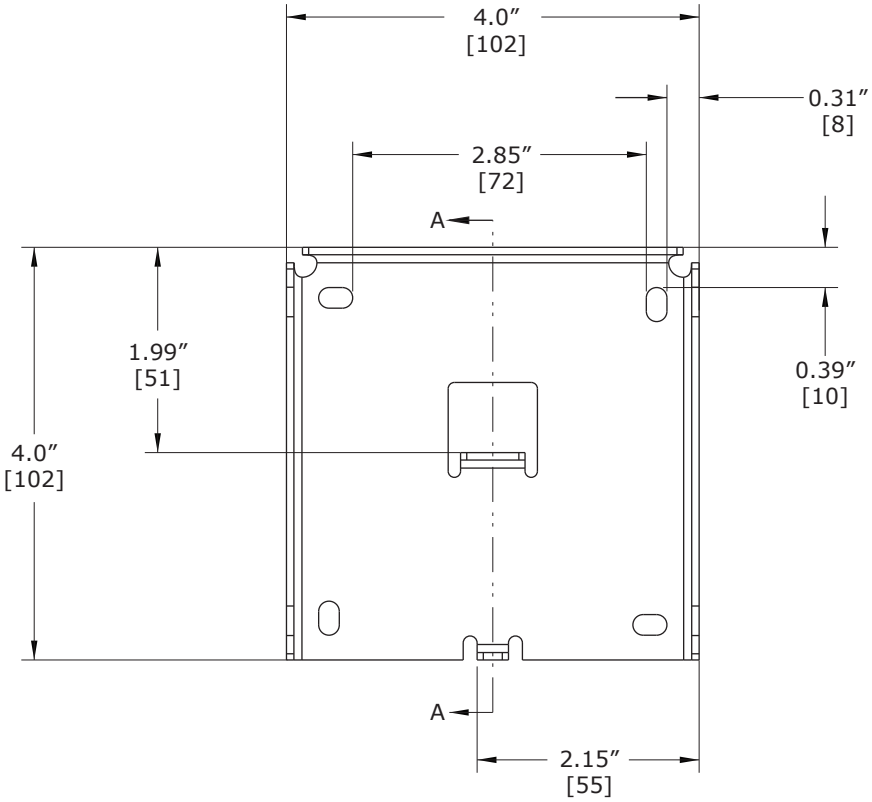

SIDE VIEW

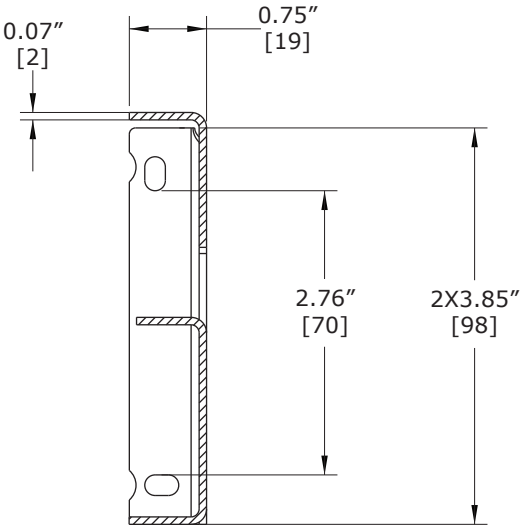

SECTION A

ROLL-A-SHADE®
MANUFACTURING SUN CONTROL SOLUTIONS
112 College St., Suite 411
Toronto, ON M5G 1L6
TF: 1(888) 245-5077
P: 1-416-639-1365 F: 1-416-639-1366
WWW.ROLLASHADE.CA

SYSTEM DESCRIPTION:

4″ R-SERIES BRACKET

DRAWN BY: MATT ALAJOKI
EMAIL: matt.alajoki@rollashade.com
DATE: 08/09/2017
SHEET 1 OF 1
RAS-B

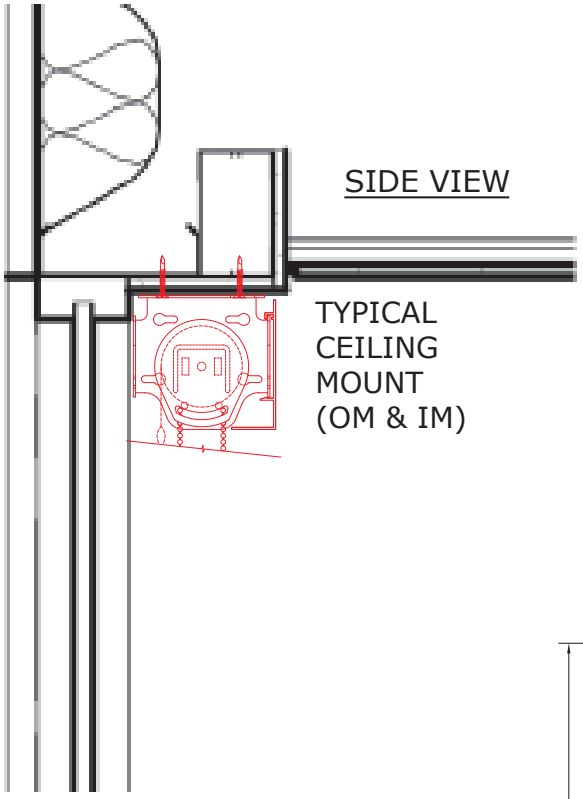

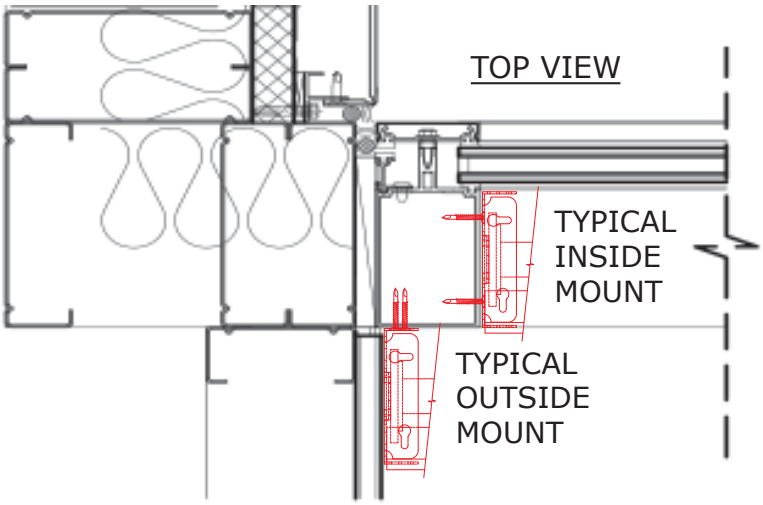

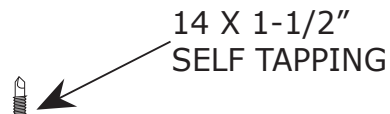

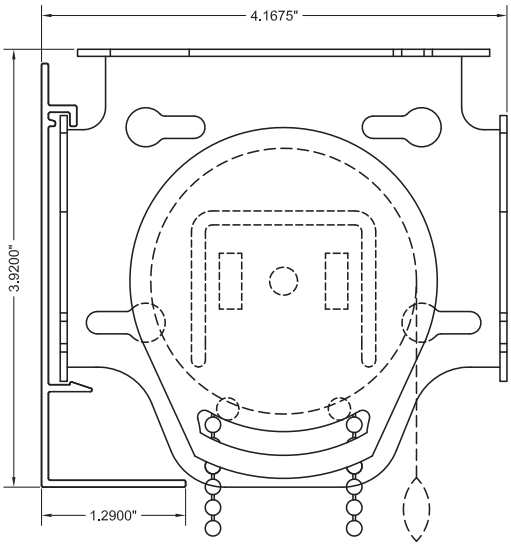

SIDE VIEW

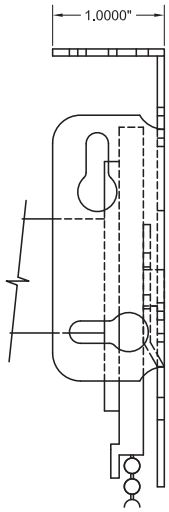

FRONT VIEW

3D VIEW

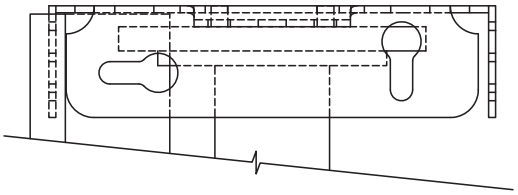

TOP VIEW

ROLL-A-SHADE®
MANUFACTURING SUN CONTROL SOLUTIONS
112 College St., Suite 411
Toronto, ON M5G 1L6
TF: 1(888) 245-5077
P: 1-416-639-1365 F: 1-416-639-1366
WWW.ROLLASHADE.CA

SYSTEM DESCRIPTION:

TYP. 4" BOTTOM FASCIA MOUNTING DETAILS

DRAWN BY: MATT ALAJOKI
EMAIL: matt.alajoki@rollashade.com
DATE: 07/11/2016
SHEET 1 OF 1
RAS-B